The COSMIC Functional Size Measurement Method
Version 4.0.2

Valve Control System
Case Study

VERSION 1.0.1

August 2018

Table of Contents

1 VALVE CONTROL REQUIREMENTS

1.1 Background of the requirements

The Valve Control system is documented in the ISO technical report: ISO/IEC TR 14143-4 (Version 2000). This ISO document provides various sets of Reference User Requirements (RUR), described usually in a textual formal. The purpose of this ISO document is to provide publicly available sets of requirements to researchers and practitioners to be used as input for measuring functional sizes of software.

The Valve Control system used in this case study corresponds to set RUR B.9 of this ISO document.

1.2 Context

The requirements below describe the behaviour of the solenoid control valve on a hydraulic circuit valve controlling a mechanical device for changing gear on an automatic transmission installed in a land vehicle.

- The valve can be open or closed: it is open by default and closed to engage the gear change mechanism.
- The process controls the amount of time the valve is closed during an operating cycle of several thousand microseconds.
- A clock supplying the operating cycle reference triggers the process.

1.3 Input

The valve control process uses as inputs:

1. A sensor signal (Gc) indicating gear change is in progress (value 1) or not (value 0),
2. A sensor signal (Su) indicating, during gear change, if shifting to upper gear (value 1) or lower gear (value 0),
3. A sensor signal (Idl) indicating whether the transmission is under stress (value 0) or idling (value 1),
4. A binary flag “A” whose value is stored in the processor ROM memory or
5. A binary flag “B” whose value is stored in the processor ROM memory,

Binary flags “A” and “B” describe some general configuration characteristics of the automatic transmission.

1.4 Output

The valve control process produces as output:

- Time (T), during one operating cycle, during which the control valve must be closed.

1.5 Requirements

1.5.1 Part A – Determine the general operating condition

Determine whether operating slowly or quickly from the closed state of the hydraulic valve.

IF (Gc = 1

AND Idl = 1
AND A = 0
AND B = 0)

THEN, operating under normal condition, perform PART B

IF (Gc = 1
AND Idl = 0
AND Su = 1
AND A = 0
AND B = 0)

THEN, operating during gear change, perform PART C

1.5.2 Part B – Control to open hydraulic valve <u>slowly</u> from its closed state

Reset T to the smaller value of either INIT or the value of T during the last process cycle, where INIT is a constant stored in the computer ROM memory,

Compute the new value of T: **T = T - (Cst_X * ET)**

where Cst_X is a constant stored in the processor ROM memory and ET is the elapsed time since an action that opens the hydraulic valve slowly from its closed state has been activated.

Condition for completion:

if the following conditions are met then valve control is passed to another process, not part of the measurement scope:

T is smaller or equal to LT OR Slp is greater or equal to Uslp

where LT is a lower threshold of time and Uslp is an upper threshold of the amount of slip stored in the processor ROM memory. Slp is the current amount of slip, which denotes the difference of number of revolutions between the engine output shaft and the power train shaft. The value is computed and updated according to the following formula and stored in the processor RAM memory.

$$\mathbf{Slp = |E_{rev} - PS_{rev}|}$$

where E_{rev} is the engine's output shaft revolutions and PS_{rev} is the power train shaft revolutions. Both variables' values are supplied by concurrent processes using input from separate sensors and placing the calculated result in the processor RAM memory.

1.5.3 Part C – Control to open the hydraulic valve <u>quickly</u> from its closed state

- Reset T to the smaller value of either INITS(V_s) or the value of T during the last processing cycle, where INITS is a table of initial values stored in the processor ROM memory and V_s is the vehicle speed which is computed and updated by another process and stored in the computer RAM memory.
- Compute the new value of T: T = T - (INCR(V_s) * ET) where INCR is a table of increments which depend on the speed of the vehicle stored in the processor ROM memory and ET is the elapsed time since an action to close the hydraulic valve quickly from its closed state has been activated,
- Condition for completion: if the following conditions are met then valve control is passed to another process:

  T is smaller or equal to LT. Where LT is a lower time threshold stored in the processor ROM memory.

2 MEASUREMENT STRATEGY

2.1 Measurement purpose

The measurement purpose is to measure all of the Functional User Requirements (FUR) of the software requirements documented in the set of Reference User Requirements selected for this case study using the COSMIC functional sizing method. The Measurer must derive the FUR from the RUR.

2.2 Measurement scope

The measurement scope is all of the software Functional User Requirements derived from the set RUR B.9, and only these. The measurement scope is therefore based on a subset of the system requirements documented in this ISO case study, that is, only those related to software, and not those related to the hardware.

There is a single software layer for this set of requirements.

2.3 Identification of functional users

The functional users that interact with this software are the following mechanical devices:

a) Send information to the software:

- Clock
- Sensors: GC, Su and IDL

b) Receives information from the software:

- The control valve

From the requirements, as written, there are no human users, nor are there other software applications interacting with this software.

Based on the requirements, we have the following context diagram:

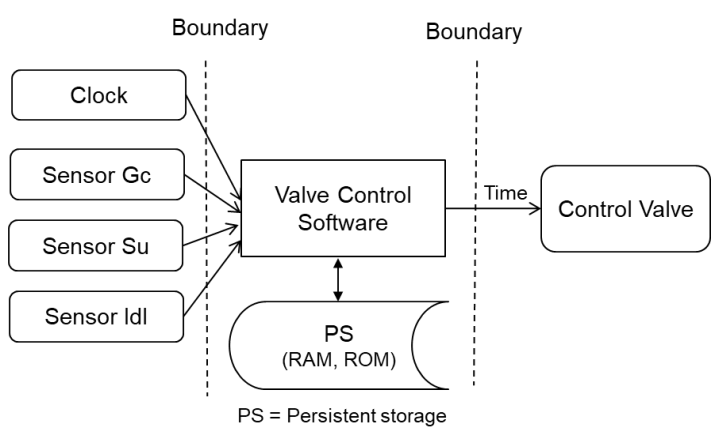

Figure 1 – Context diagram of the Valve Control software from its FUR

2.4 Other measurement strategy parameters

Level of granularity. The software requirements of the Valve Control are at the 'functional process level of granularity' as the functional users are individual hardware devices (not groups of these) and a single event occurs that the software must respond to (not groups of events).

Level of Decomposition: No decomposition.

Persistent storage. The COSMIC model does not recognize specific types of hardware storage as persistent storage, the ROM and RAM correspond to the persistent storage.

3 THE MAPPING AND MEASUREMENT PHASES

3.1 Identification of the software triggering event

From the documented requirements a single triggering event is identified:

- A Clock supplying the operating cycle reference which triggers the process.

3.2 Identification of functional processes

From the documented requirements with a single triggering event, there is one functional process:

- The Control of time during the operating cycle of the control valve.

3.3 Identification of objects of interest

As noted in the Measurement Manual [1], section 3.3.4, a physical hardware device can be a functional user and also an object of interest. In effect the hardware device interacts with the software to provide or to receive data about itself. Consequently, the objects of interest and their respective data attributes are as follows.

Clock.	Operating cycle reference
Sensor Gc.	Current value of the Gc sensor
Sensor Su.	Current value of the Su sensor
Sensor Idl.	Current value of the Idl sensor
Control Valve.	New value of T

3.4 The functional process and its data movements

This section describes the functional process with its data movements. Sizes are indicated in the COSMIC unit: 1 COSMIC function point = 1 CFP.

Data movement types are abbreviated as E = Entry, X = Exit, R = Read, W = Write.

Functional Process: **The Control of time during the operating cycle of the control valve** **Triggering Event:** **The operating cycle reference**					
Functional user	**Data movement description**	**Name of Data Group moved**	**Object of interest of Data Group moved**	**Data Mvt. Type**	**CFP**
Clock	Supply operating cycle reference	Operating cycle reference	Clock	E	1
Sensor Gc	Receive signal of sensor Gc	Gc value	Sensor Gc	E	1
Sensor Su	Receive signal of sensor Su	Su value	Sensor Su	E	1
Sensor Idl	Receive signal of sensor Idl	Idl value	Sensor Idl	E	1
-	Read Valve fixed	Valve fixed	Valve fixed	R	1

	parameters from ROM	parameters*)	parameters		
-	Read of T from RAM	T	Period valve-to-be-closed	R	1
-	Read of ET from RAM	ET	Period since last action	R	1
-	Read of E_{rev} from RAM	E_{rev}	Engine	R	1
-	Read of PS_{rev} from RAM	PS_{rev}	Power train	R	1
-	Read V_s from RAM	V_s	Vehicle	R	1
-	Send T to the Control Valve	T	Control Valve	X	1
-	Write T to RAM	T	Period valve-to-be-closed	W	1
					Total size: 12 CFP

*) The 'Valve fixed parameters' consist of Flag A, Flag B, INIT, Cst_X, LT, Uslp, INITS 1, 2, 3 etc and INCR 1, 2, 3, etc, all other data groups consist of one data attribute.

Note 1: The three parameters E_{rev}, PS_{rev} and V_s are, explicitly according to the requirements, obtained from RAM and provided by other processes. The requirements do not state if these other processes are hardware or software but that does not concern us. These three parameters have to be Read from RAM by the Valve Control process.

Note 2: The requirements, as documented, do not specify whether the Elapsed times (which are defined differently for Parts B and C) are given by the hardware, or whether they are calculated by the software, nor do the requirements state where the ET is obtained from. For the purposes of this case study (that is to measure what is explicitly allocated to software and FUR) this is then not FUR to be measured: the ET is provided by another process and the Valve Control process obtains it from the RAM. Should the documentation of the requirements be modified to explicitly assign this to a software function, another functional measurement would have to consider this added function to be developed and measured.

Note 3: Slp is calculated on each cycle and is not made persistent between cycles. It is therefore the result of data manipulation and is not involved in any data movement according to the COSMIC method.

4 QUESTIONS AND ANSWERS

Question 1

The following is written in the specifications: 'Reset T to the smaller value of either INIT or the value of T during the last process cycle'. Why must a Read data movement of T be identified?

Answer to Question 1

Because T is always updated according to the hydraulic valve operating state.

Question 2

It is written in the documented requirements that the Flags A and B are 'Inputs' to the software. When the software accesses the information in Flags A and B, why in COSMIC are these data movements considered as Reads and not considered as Entries?

Answer to Question 2

The vocabulary in the documented requirements is not standardized. Even though Flags A and B are mentioned as 'inputs', it is also written that they are coming from a ROM memory. In COSMIC, if there is no question of the ROM being accessible via another piece of software, information in a ROM is considered as persistent data within the software boundary. Any access to these data is then identified as a Read.

Question 3

What is the impact on the measurement result if the <u>system</u> requirements are changed and the elapsed time (ET) is to be implemented as a hardware function?

Answer to Question 3

If ET comes from hardware, then a 'functional user' (For ET as a hardware source) should be shown on the diagram and ET should NOT be shown in the RAM.

Then: ET is an Entry data movement from hardware, instead of one Read data movement from RAM. The overall size is unchanged.

Question 4

What is the impact on the measurement results if the <u>software</u> functional requirements are changed as follows:

Old requirement: ET is provided by hardware and stored in RAM

New requirement: this Valve Control process calculates and keeps track from one cycle to another, that is, Valve Control process stores a time-stamp to RAM between cycles and uses it to calculate ET.

Answer to Question 4

To do this the Valve Control process needs one Read and needs to Write a time-stamp to RAM between cycles. The overall size would increase by one CFP from the solution given in 3.4 above.

5 QUALITY CRITERIA FOR REQUIREMENTS

5.1 Observations on the clarity of the documented requirements

Even though the documented requirements used for this case study are coming from an ISO technical report, there is no mention in this report about the quality of these requirements.

IEEE Std 830-1998 recommends that requirements meet the following quality criteria:

- Correct;
- Unambiguous;
- Complete;
- Consistent;
- Ranked for importance and/or stability;
- Verifiable;
- Modifiable;
- Traceable.

In the ISO technical report, there is no claim that their sets of documented requirements meet the quality criteria specified in IEEE 830. The following ambiguities have been noted:

1 From the documented requirements, it is not clear neither where the control of the valve is performed nor where to send the time T after the calculation. For this measurement, the following clarification to the written requirements as been specified as follows:
   - *T is sent to the Control Valve*

2 It is not documented when the application interacts with the ROM and the RAM. The specifications do not make clear the sequence in which any of the data movements occur. This observation does not modify the result of measurement of the functional size.

3 In the parts B & C of the requirements, there is no indication for actions to take if the conditions for completion are not met.

4 It is not documented where the variable ET (Elapsed time) comes from (that is, the elapsed time since an action that opened the hydraulic valve slowly or closed it quickly). For the measurement of this case study, this requirement have been specified as follows in the documentation used for measurement:
   - *ET is read from the RAM.*

5 The parameters E_{rev}, PS_{rev} and V_s are all stated to be supplied into RAM by 'other concurrent functional processes'. Since these are seemingly asynchronous with the Valve Control functional process being measured it seems correct to assume that they are all attributes of separate Objects of interest, thus requiring separate Reads.

6 Note that the parameter T must be made persistent in RAM between each cycle of the Valve Control functional process. Therefore, each cycle of this process must Read the value from the last cycle and Write the latest value for use by the next cycle.

7 In section 1.5.1 it reads ‘THEN, operating under <u>normal</u> condition, perform PART B’. It is not explained what ‘normal condition’ means.

5.2 Conclusions and observations

This case study has provided an illustration of the functional size measurement with ISO 19761: 2017 COSMIC. The measurement is based on the requirements of RUR B.9 of ISO TR 14143-4, as documented in a textual format.

During the measurement process, uncertainties and ambiguities about the documented requirements have been noted. It was also observed that these requirements do not meet all of the quality criteria listed in IEEE 830.

The measurement solution presented takes into account some clarifications that have been required to document the allocation for instance of the Elapsed time calculation function to hardware. If the modifications to the documentation of the requirements are changed by something else, then the measured functional size could change.

A MESSAGE SEQUENCE DIAGRAM

For the single functional process, all data movements of a data group must be identified. In this case study, the Message Sequence Diagram (Figure 2) has been prepared to facilitate the identification of the data movements, and to ensure that all data movements have been identified.

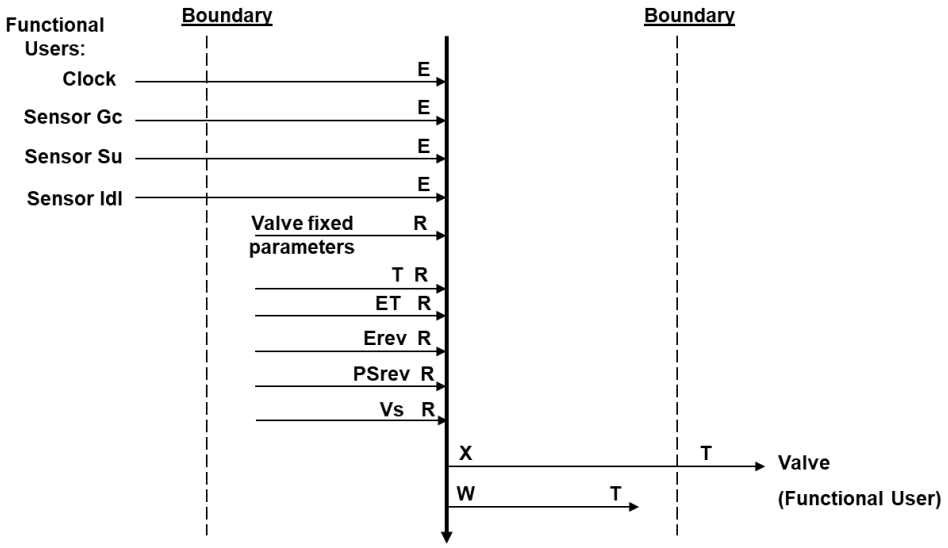

Figure 2 - Valve Control Application – Message Sequence Diagram

Appendix B

VERSION CONTROL

The following is a partial account of the evolution of this case study. For details see the previous version of this case.

Date	Reviewers (s)	Modifications / Additions
Jan 2006	Adel Khelifi, Alain Abran, Chantal Roy, Charles Symons, Marie O'Neill	COSMIC-FFP version 1.0 published.
August 2018	Arlan Lesterhuis, Bruce Reynolds, Charles Symons	Version 1.0.1 updated to align with Measurement Manual version 4.0.2: document style adjusted, context diagram redrawn, 'Cfsu' replaced by 'CFP'. No changes in content.

CHANGE REQUESTS, COMMENTS, QUESTIONS

Where the reader believes there is a defect in the text, a need for clarification, or that some text needs enhancing, please send an email to: mpc-chair@cosmic-sizing.org

You can use the forum on cosmic-sizing.org/forums to post your questions and receive answers from our world-wide community. The quality of any answers will depend on the knowledge and experience of the community member that writes the answer; the MPC cannot guarantee the correctness. Commercial organizations exist that can provide training and consultancy or tool support for the method. Please consult the www.cosmic-sizing.org web-site for further detail.